Specification

Battery Model	AM0465
Customer	Amazon
Cell Model	CA2855C7G
Customer's PN	58-000612
SCUD's PN	RH5G12010004
Pack type	Rechargeable Li-ion Polymer Battery Pack
Version / Date	V1.3/ 2022-09-06

	Draft	Check	Approve
Name			
Date			

Version History

Date	Version	Content	Author
Aug.21.2022	V1.0	First Edition	Shaowei Chen
Sept.6.2022	V1.1	2.2 Protection function: modify protection parameters	Shaowei Chen
Sept.8.2022	V1.2	8 Update Mechanical Structure parameter	Shaowei Chen
Sept.28.2022	V1.3	2.1 Modified SCUD Shipping OCV range to 3.94~4.05V； 5. Updated PCBA part list.	Shoawei Chen

Catalogue

1 Overview 4

2 Specification 4

2.1 Electrical specification 4
2.2 Protection Function 5

3 Performance 6

3.1 Standard Test Conditions 6
3.2 Standard Charging Definition 6
3.3 Standard Discharging Definition 6
3.4 Environment Test 6
3.5 Reliability Test 8

4 Circuit Diagram 9

5 PCBA Part List 10

6 Pack connector definition 11

7 Layout 11

8 The Mechanical Structure Parameters 12

9 Certification Standard 13

10 Recycling Indicators 13

11 Label and Package 14

1 Overview

The specification is applicable to Amazon provided by SCUD.

2 Specification

2.1 Electrical specification

No.	Item		Specification	Remark
1	Nominal Voltage		3.83V	
2	Minimal Capacity		6500mAh	0.2C discharge at 25°C±3°C 3.0V cut-off After standard charge
3	Nominal Capacity		6500mAh	0.2C discharge at 25°C±3°C 3.0V cut-off After standard charge
4	Rated Charge Voltage		4.40V	
5	Discharge Cut-off Voltage		3.0V	
6	Charge Current	Standard	1.3A	0.2Cmin
		Max continued	3.25 A	0.5Cmin
7	Discharge Current	Standard	1.3 A	0.2Cmin
		Max continued	3.25A	0.5Cmin
	Pre-charge current	Max.	150mA	MAX 60mins, at 2V-3V
8	AC impedance		≤ 120mΩ	AC 1kHz, at 25°C, as shipping OCV
9	SCUD Shipping OCV range		3.94 V ~ 4.05 V	
10	FATP IQC OCV range		3.90 V ~ 4.05 V	
11	Operating Temperature(Cell surface temperature)	Charge (Humidity: Less than 85% RH)	0 °C ~15 °C	0.18Cmin Max to 4.0V, 0.1Cmin to 4.4V, then CV to 0.05Cmin
			15 °C ~45 °C	0.5Cmin Max to 4.4V, then CV to 0.05Cmin
			45 °C ~60 °C	0.5Cmin Max to 4.1V
		Discharge (Humidity: Less than 85% RH)	-20 °C ~ 0 °C	0.3Cmin Max to 3.0 V
			0 °C ~60 °C	0.5Cmin Max to 3.0 V
12	Power consumption	Normal Mode	≤ 10 μA	CHG on, DSG on

		Standby Mode	≤1.2 μA	CHG off, DSG off, Cell voltage <1.9V
13	Storage Condition		1 month: -20~60℃	Humidity: 45%~90%RH
			3 month: -20~45℃	
			1 year: -20~25℃	
14	Weight		97.2g for reference	

2.2 Protection Function

No.	Item	Unit	Min.	Typ.	Max
Primary Protection					
1	Overcharge protection voltage	V	4.455	4.475	4.495
2	Overcharge protection delay time	s	0.7	1.0	1.4
3	Overcharge released voltage	V	Discharge Release		
4	Overdischarge protection voltage	V	2.465	2.5	2.535
5	Overdischarge protection delay time	ms	48	64	80
6	Over discharge released voltage	V	Charge Release		
7	Charge over current protection	A	4.85	5.25	5.65
8	Charge over current protection delay time	ms	12.05	17	22.8
9	Discharge over current protection	A	4.85	5.25	5.65
10	Discharge over current protection delay time	ms	185	256	333.5
11	Short circuit protection	A	18	20	22
12	Short circuit protection delay time	μs	175	280	420
13	0 V charging		Inhibition		
Secondary Protection					
14	Overcharge protection voltage	V	4.50	4.52	4.54
15	Overcharge protection delay time	s	0.7	1.0	1.4
16	Overcharge released voltage	V	Discharge Release		
17	Overdischarge protection voltage	V	2.06	2.100	2.14
18	Overdischarge protection delay time	ms	48	64	80
19	Over discharge released voltage	V	Charge Release		
20	Charge over current protection	A	7.45	8.0	8.55
21	Charge over current protection delay time	ms	11.9	17	24
22	Discharge over current protection	A	6.45	7.0	7.55
23	Discharge over current protection delay time	ms	358	512	695
24	Short circuit protection	A	24.7	26.7	28.7
25	Short circuit protection delay time	μs	175	280	420
26	0 V charging		Inhibition		

Others						
27	Current consumption	Operating	μA	-	4.0	10.0
		Standby		-	-	1.2
28	ID @25℃	22k,±1%	kΩ	-	22	-
29	Therm @25℃	B=4050k,±1%	kΩ	-	47	-

3 Performance

3.1 Standard Test Conditions

Test condition shall be at 25 ±2°C and 65 ±20% R.H. However, temperature range of 15～30°C, humidity 25～85% is acceptable as far as the test reliability is assured.

3.2 Standard Charging Definition

In an atmosphere of 25 ± 2 °C, a constant voltage of 4.4 V and a constant current of 0.2C were charged to a turn-off current of 325 mA(0.05Cmin).

3.3 Standard Discharging Definition

Discharge at a constant current of 0.2C down to 3 V in 25 ±2°C atmosphere.

3.4 Environment Test

No.	Item	Condition	Criteria
1	Thermal Cycling	1) Temperature cycling from 75 ± 2 ℃ to -40 ± 2 ℃. 2) Test time: 6 hours dwell, 13 hours/cycle, 10 cycles Fixture:None. Keep the batter pack in the chamber	1) ELECTRICAL • No inherent performance degradation. 2) MECHANICAL • No obvious abnormal appearance. • No inherent mechanical damage. 3) SAFETY • No venting, no leakage, no rupture, no smoke, no fire and no explosion.
2	Heating	1) Ramp from 20 ± 2° C to 130 ± 2° C with 5 ± 2° C/minute. 2) Dwell time: 130 ± 2° C, 30 minutes. 3) Inspect the UUT when the temperature returns to room	1) SAFETY • No leakage, no rupture, no smoke, no fire and no explosion. • The maximum temperature is not more

		temperature 20 ± 5° C. UUT’s temperature and output voltage need to be monitored during the testing. Fixture:None. Keep the batter pack in the chamber	than 170° C
3	Low Temperature Performance	1) Test temperature: -20 ± 2° C 2) Test duration: 16 hours 3) Perform Full Standard Discharge at -20 ± 2° C after the UUT is soaked at -20 ± 2° C with 16 hours. 4) Inspect the UUT until the temperature returns to room temperature 20 ± 5° C for 2 hours.	1) ELECTRICAL • The discharge time of T1 should not be less than 45% of T0. • No inherent performance degradation. 2) MECHANICAL • The thickness change rate should be less than 3%. • No obvious abnormal appearance. • No inherent mechanical damage. 3) SAFETY • No swelling, no venting, no leakage, no rupture, no smoke, no fire and no explosion.
4	Constant Temperature and Humidity Test	Test level: 1) Level 1: 85 ± 2 ℃ and 85% RH for 18 hours (total 3 cycles, dwelling 6 hours per cycle). 2) Level 2: 85 ± 2 ℃ and 85% RH for 36 hours (total 6 cycles, dwelling 6 hours per cycle), and continue test to failure if no failure occurs after 6 cycles. And then record failed cycle time. 3) The UUT thickness should be measured within 10 minutes after each cycle of testing. Thickness change rate of each cycle should be calculated based on pre-test data and post-test data of each cycle. 4) After level1 test for 3 cycles or level 2 test for 6 cycles: The UUT should be	1) ELECTRICAL • The discharge time T1 should not be less than 75% of the discharge time T0. • No other inherent performance degradation. 2) MECHANICAL • The thickness change rate should be less than 10%. • No other inherent mechanical damage. 3) SAFETY • No venting, no leakage, no rupture, no smoke, no fire and no explosion.

		stored at ambient environment for 2 hours firstly and then be fully standard discharged.	

3.5 Reliability Test

No.	Item	Condition	Criteria
1	Drop	Per UL2054 Each of three samples is to be dropped from a height of 1m so it strikes a concrete surface in the position that is most likely to produce the adverse results (explosion and fire). Each sample is to be dropped three times.	1) MECHANICAL • For hard pack only: the outer enclosure of the UUT shall not crack to the extent that cells or any protective devices are exposed 2) SAFETY • No venting, no leakage, no rupture, no smoke, no fire and no explosion.
2	Impact	1) The UUT is to be placed on a flat surface. A 5/8 inch (15.8mm) diameter cylinder steel bar is to be placed across the center of the UUT. A 20 pound (9.1kilogram) cylinder weight is to be dropped from a height of 24±1 inch (610±25 mm) onto the UUT. 2) Each UUT is to be subjected to one single impact. 3) The temperature of the UUT needs to be monitored during the testing	1) SAFETY • The maximum temperature is not more than 170° C • No smoke, no fire and no explosion.
3	Vibration	Per UN38.3 Vibration Test 1) A sinusoidal waveform with a logarithmic sweep between 7Hz and 200Hz and back to 7Hz traversed in 15minutes. This cycle shall be repeated 12times for a total of 3 hours for each of three mutually perpendicular mounting positions of the cell. Apply the each cycle vibration as specified in Table 4-1 (refer in word-based spec).	1) ELECTRICAL • No other inherent degradation of functional performance. 2) SAFETY • No venting, no leakage, no rupture, no smoke, no fire and no explosion.
4	Cycle Life	Test procedure: - a pack shall be charged at a constant current of 0.5C or maximum manufacturer's recommended charge rate until the voltage reaches maximum manufacturer's recommended voltage	1) ELECTRICAL • The discharge time should be decreased less than 20%. • No other inherent performance degradation.

		- then, the sample shall be charged at a constant max manufacturer's recommended voltage until its charge current is less than C/20. - the sample shall be stored for 30 minutes - and then, the sample is discharged to it's cut-off voltage with a constant current of 0.5C or maximum manufacturer's recommended discharged rate. - the sample shall be stored 30 minutes prior to next cycle Test completion: - 500 cycles or as required by Lab126 spec. Test environment: Level 1: low temperature of 0 ±2° C Level 1: ambient temperature of 25 ±2° C Level 1: ambient temperature of 45 ±2° C (x cycles with 80% retained capacity)	2) MECHANICAL • Thickness change shall be less than the value defined in MCO. 3) SAFETY • No venting, no leakage, no rupture, no smoke, no fire and no explosion.

4 Circuit Diagram

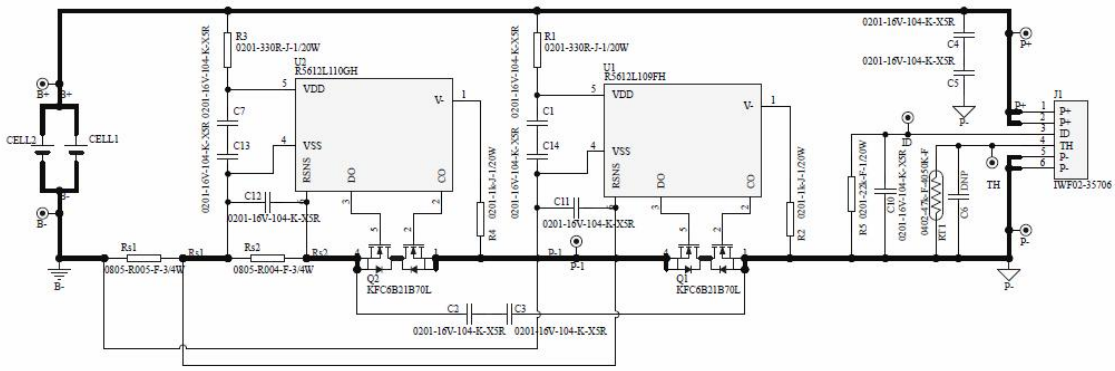

5 PCBA Part List

No.	Type	Symbol	Description	Qty.	Manufacturer	Package
1	Capacitor	C1,C2,C3,C4,C5,C7,C10,C11,C12,C13,C14	0201-16V-104-K-X5R-muRata /0201-16V-104-K-X5R-Yageo(ALT.) /0201-16V-104-K-X5R-Taiyo(ALT.)	11	muRata /Yageo(ALT.) /Taiyo(ALT.)	0201
2	Resistor	R1,R3	0201-330R-J-YAGEO /0201-330R-J-TA-I(ALT.) /0201-330R-J-RALCE(ALT.)	2	Yageo /TA-I(ALT.) /RALEC(ALT.)	0201
3	Resistor	R2,R4	0201-1k-J-YAGEO /0201-1k-J-TA-I(ALT.) /0201-1k-J-RALCE(ALT.)	2	Yageo /TA-I(ALT.) /RALEC(ALT.)	0201
4	Resistor	R5	0201-22k-F-YAGEO /0201-22k-F-RALEC(ALT.)	1	Yageo /RALEC(ALT.)	0201
5	Sense Resistor	Rs1	STE0805MW75R004FS-walter /SMF08MCFR004T(ALT.)	1	Walter /SART(ALT.)	0805
6	Sense Resistor	Rs2	STE0805MW75R003F-walter /RLT10FTIR003-TA-I (ALT.)	1	Walter /TA-I(ALT.)	0805
7	1st Protection IC	U1	R5612L109FH	1	RICOH	DFN1814-6C
8	2nd Protection IC	U2	R5612L110GH	1	RICOH	DFN1814-6C
9	MOSFET	Q1,Q2	KFC6B21B70L /AOCA24106E	2	Nuvoton /AOS(ALT.)	CSP*6
10	NTC	RT1	0402-47K-F-4050K-F-Mitsubishi /0402-47K-F-4050K-F-muRata(ALT.)	1	Mitsubishi /muRata(ALT.)	0402
11	Ni-Plate	B1+/B1-/B2+/B2-	7.0*3.1*0.1	4	Da Tong /Fuci(ALT.)	7*3.1*0.1
12	PCB	-	Tungsten-A01	1	Victory Giant /EXPRESS ELECTRONICS(ALT.)	-
13	Connector	J1	ACES 50270-006H0H1-004 /JCTC 11202HOO-6PA-H1-HF	1	ACES /JCTC(ALT.)	-
14	Solder Paste	-	OM340 /M705(ALT.)	-	Alpha /Senju(ALT.)	-

6 Pack connector definition

Name	Description	Remark	PIN
P+	Battery pack positive terminal		1
P+	Battery pack positive terminal		2
ID	ID resistor	22k(25℃)	3
TH	Temperature detect	47k-4050k(25℃/50℃)	4
P-	Battery pack negative terminal		5
P-	Battery pack negative terminal		6

7 Layout

Top Overlay:

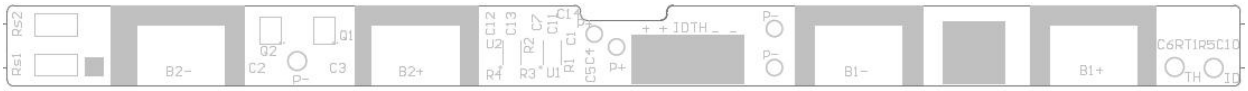

Top Layer:

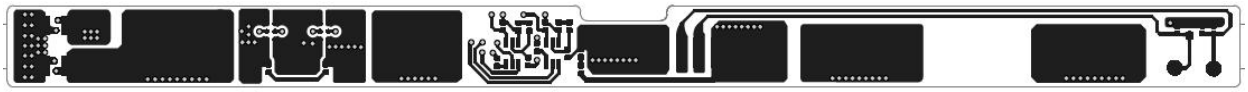

Mid Layer1:

Mid Layer2:

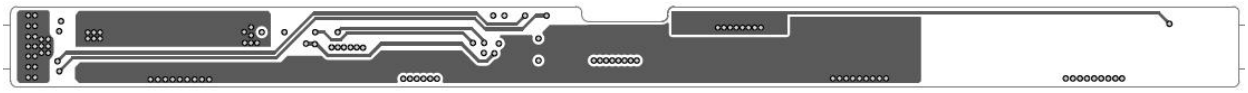

Bottom Layer:

Bottom Overlay/Solder:

Drill:

8 The Mechanical Structure Parameters

PART NUMBER APPLICATION TABLE

ITEM	PART No.	SPECIFICATION	REMARK
1	RH5G12010004	AM0465-Cosmx-CA2855C7G-1S2P	
2			
3			
4			
5			
6			
7			
8			

REVISONS LIST

ITEM	MARK	QTY	CONTENTS OF CHANGE	REVISER	DATE
1					
2					
3					

通用技术要求:
1. 所有材料和涂层必须符合所有适用的国际环境相关法规，包含但不限于RoHS、REACH、HF;
2. 所提供的3D数据将用于生产和检验;
3. 几何尺寸公差参照ASME Y14.5-2018;
本图未注几何公差按:

⌓ 0.8 A B Ⓜ C Ⓜ	⌒ 0.8 A B Ⓜ C Ⓜ	⌖ Ø0.8 Ⓜ A B Ⓜ C Ⓜ	⌖ Ø0.8 Ⓜ A B Ⓜ C Ⓜ
所有混合面	所有切边线	Ø尺寸±0.25 圆形尺寸要素	尺寸±0.25 非圆形尺寸要素

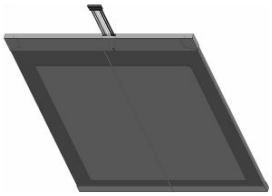

4. ⓕ表示FAI尺寸，ⓒ表示CPK尺寸，( )表示参考尺寸，△表示变更版本，未注尺寸公差按附表;
5. 在运输和搬运过程中，部件必须包装，以防止损坏、变形或污染;
6. 所有部品表面应符合SCUD外观规格标准和封样品;
外观表面无缺陷，没有流痕、烧伤痕迹、凹痕、裂纹、熔接线、污垢、氧化等缺陷;
毛刺应控制在材料厚度的10%以内;
7. 不得含有二次料，未经SCUD允许不得更改原材料或量产后的注塑参数;
8. 其他未注项目对比封样，参考部品承认书，依据SCUD进料检验通用规范执行。

附加技术要求:
1. 电池外观请按照客户标准进行检测

mm<size(A)<=mm	TOL	DRW. No.			福建飞毛腿动力科技有限公司 FUJIAN SCUD POWER TECH. CO.,LTD			
-	-	NAME	PACK					
0<A<=30	+/-0.10							
30<A<=50	+/-0.15	DESIGNED			UNIT	mm	MATERIAL	
50<A<=100	+/-0.20	STANDARD			SCALE	1:1		
100<A<=200	+/-0.25	CHECKED			SIZE	A4	PROJECT	Tungsten
200<A	+/-0.30	APPROVED			SHEET No.	1/3	REV	1.0

PIN#	1,2	3,4	5,6
Color	Red	White	Black

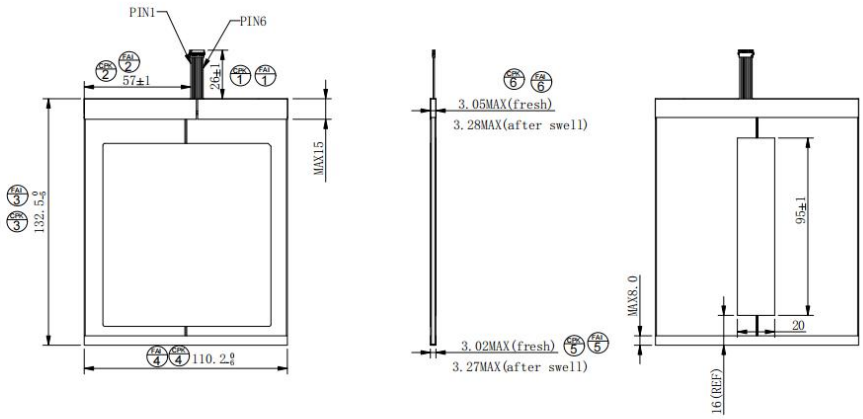

mm<size(A)<=mm	TOL	DRW. No.			福建飞毛腿动力科技有限公司 FUJIAN SCUD POWER TECH. CO.,LTD			
-	-	NAME	PACK					
0<A<=30	+/-0.10							
30<A<=50	+/-0.15	DESIGNED			UNIT	mm	MATERIAL	
50<A<=100	+/-0.20	STANDARD			SCALE	1:1		
100<A<=200	+/-0.25	CHECKED			SIZE	A4	PROJECT	Tungsten
200<A	+/-0.30	APPROVED			SHEET No.	2/3	REV	1.0

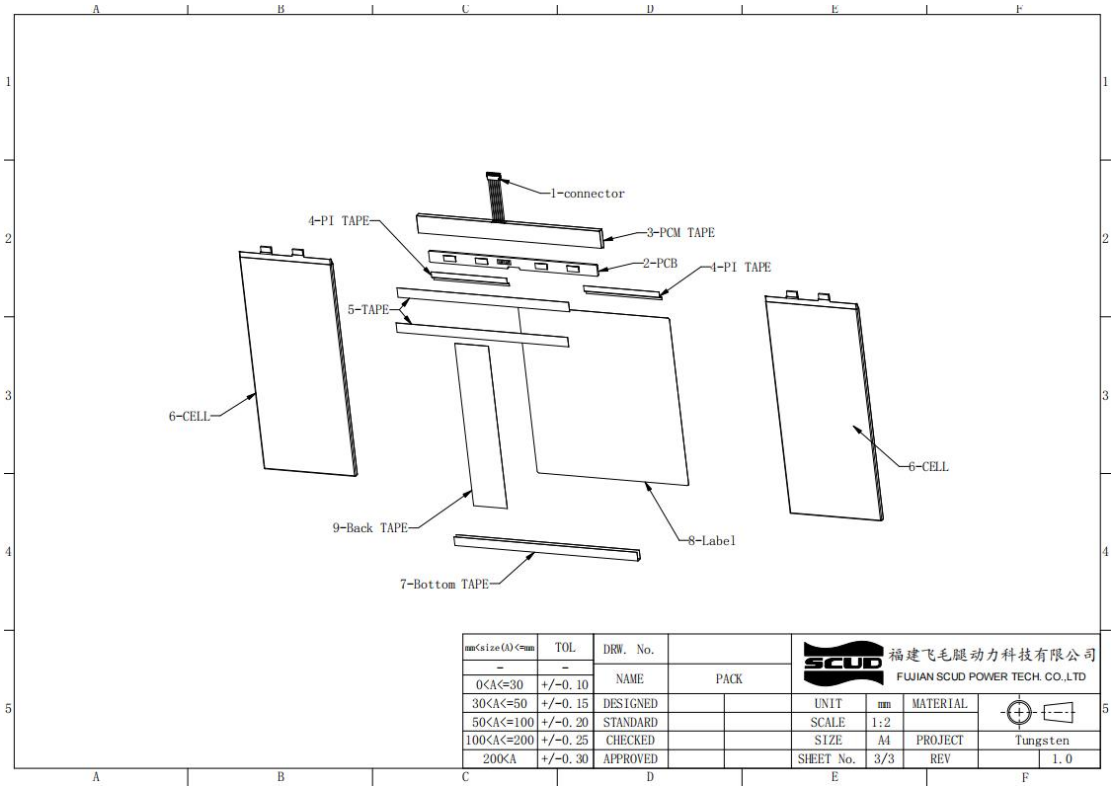

9 Certification Standard

UL 2054 Pack
IEC 62133-2:2017 + CB Report
IEC 62368-1 and EN 62368 + CB Report
UL/CUL 60950 or EN60950 (the most updated version) + CB Report
Japan PSE for embedded lithium–ion batteries
Battery Directive
China CSTCG (Air and Sea)
UN38.3
CE Declaration of Compliance
WERCS Cert.
CTIA/IEEE1725

10 Recycling Indicators

Products comply with the RoHS Directive (EU 2002/95 / EC Directive), prohibits the use of six hazardous substances: lead (lead, Pb), mercury (mercury, Hg), cadmium (cadmium, Cd), 6 hexavalent chromium (hexavalent chromium), PBB (polybrominated biphenyl flame retardants) and PBDE (polybrominateddiphenyl ether flame retardants).

Criteria: the content of material constituting the product in the homogeneous material (homogenous material) of the above substance (weight ratio) must not exceed the threshold value of the following: Cd: 0.01% (100ppm); the other five materials: 0.1% (1000ppm); defined homogeneous material: a uniform distribution of the material can not be mechanically separated. Eg: for SnPb solder plating copper wire, can be decomposed into two homogenous materials: copper and SnPb plating.

11 Label and Package

SPC********
**AM04650

二维码定义

2D Barcode definition

1-2 位表示 Pack 厂商(飞毛腿用"SP"表示);

The 1-2rd digits indicate the pack manufacturer (SCUD is represented by "SP");

3 位表示电芯供应商(Lishen 用"L" 表示，CosMX 用 "C"表示);

The 3rd digit indicates the cell supplier(LSN is represented by "L"， CosMX is represented by "C")

4 位表示年份，取年份最后一位(2022 年用"2"表示);

The 4th digit represents the year,and the last digit of the year is taken (2022 is represented by "2");

5 位表示月份(1~9 月用 1~9 表示，10~12 月用 A~C 表示);

The 5th digit indicates the month (1~9 for Jan~Sep and A~C for Oct~Dec);

6-7 位表示日期(用 01~31 表示);

The 6th~7th digits indicate the date (represented by 01~31);

8-11 位表示流水号(用 0001~FFFF 表示，采用 16 进制);

The 8-9th digits represent the serial number (represented by 0001~FFFF, hexadecimal);

12-13 位表示版本号(PROTO 和 XVT 阶段为 01~09，量产阶段为 10~19);

The 12th-13th digits represent the version number (PROTO & XVT stage: 01~09; MP stage: 10~19);

14-20 位表示供应商 Model No.: 用 AM0465，不足位数用 0 补齐.

The14th-20th digits represent vendor Model No.: use AM0465, the short No. is filled by 0

扫描显示与明码保持一致(SPC2905000101AM04650)

PART NUMBER APPLICATION TABLE

ITEM	PART No.	SPECIFICATION	REMARK
1			
2			
3			
4			
5			
6			
7			
8			

REVISONS LIST

ITEM	MARK	QTY	CONTENTS OF CHANGE	REVISER	DATE
1					
2					
3					

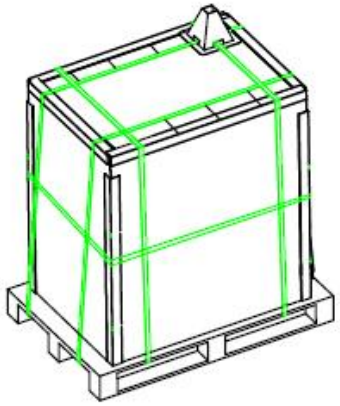

技术要求：

1.包装箱如图摆放，摆放时使包装箱居中，确保唛头标签朝外;摆放层数≤6层，低层放满后，方可加层叠放;
2.底部，上部与侧边放置护角，护角不可超出纸箱边缘,不可短于集合件的长,高,宽度方向的长度要与竖两边方向的紧挨;
3.使用缠绕膜整件打包，确保集合件稳固不出现倾斜、摇晃等异常,缠绕膜缠3圈以上;
4.采用塑料打包带进行“#”字形打包，打包带位于两端约1/4处，打包带应松紧适宜，不可太松，致使纸箱滑动；不可太紧，损坏纸箱，打包带与纸箱接触角应采用边条包边，防止打包带磨损纸箱;
5.禁止栈板2层堆叠,禁止水淋,栈板上的产品禁止倒装。

打包带打包方式：

1.采用储电式手提打包机热熔接合打包带，搭接热熔区需为长方形完全，深度熔合，热熔区中部不允许出现孔洞、缝隙、表层熔合等异常现象;
2.捆扎后，打包带表面不得扭曲、歪斜、裂开；打包完成后，打包带松紧适宜，并将热熔后多余的打包带切除，余量小余20mm。

缠绕膜缠绕方式：

1.在电池外箱在栈板居中摆放好后，用透明缠绕膜整体缠绕一层，缠绕膜需把栈板同时缠绕;
2.在高度的4个边各加一个护角，进行缠绕后，再放置长度方向护角，要求压在竖直方向护角上，最后放置宽度方向的护角，要求与两边的护角方向紧挨，放置后好护角后再进行缠绕;
3.缠绕3圈以上，缠绕膜必须确实缠绕并包裹住纸箱;
4.当纸护角长度不足时，允许护棱平齐拼接使用，但禁止重叠拼接。

mm<size(A)<=mm	TOL	DRW. No.	DBS003265		福建飞毛腿动力科技有限公司 FUJIAN SCUD POWER TECH. CO.,LTD				
-	-	NAME	包装示意图						
0<A<=30	+/-0.10								
30<A<=50	+/-0.15	DESIGNED			UNIT	mm	MATERIAL		
50<A<=100	+/-0.20	STANDARD			SCALE	NTS			
100<A<=200	+/-0.25	CHECKED			SIZE	A4	PROJECT	Tungsten	
200<A	+/-0.30	APPROVED			SHEET No.	1/2	REV	V	1.0

电池

1. 将电池装入PS托盘中，电池铭牌朝上放置，4pcs/托盘

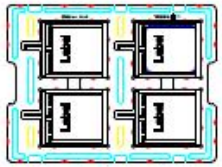

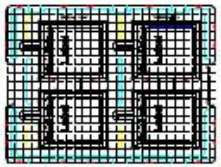

2. 每个托盘放完电池后盖1pcsPE膜

3. 装箱，所有托盘，PE膜及垫片放入大塑料袋中

⚠ 注意：最上层不放空托盘

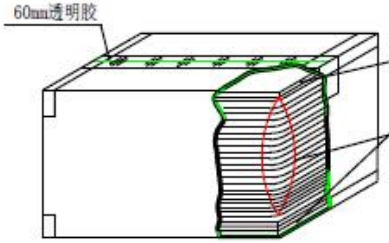

单箱爆炸图

4. 封箱，贴标签

MES标
（仅示意，具体内容以实际生产为准）

出货标
（仅示意，具体内容按商务要求定义）

5. 纸箱堆叠示意

⚠ 外箱标签朝外放置

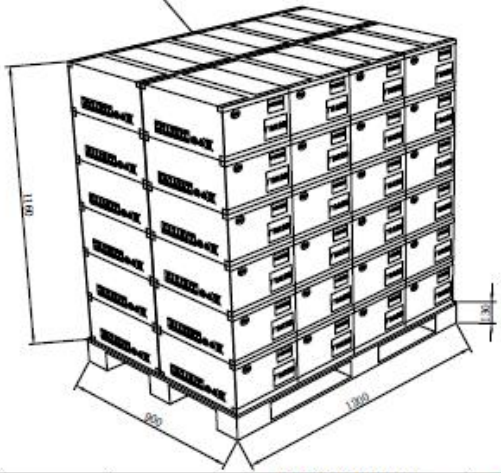

外箱尺寸：415*290*183mm
栈板尺寸：1200*900*130mm
装板箱数：8箱*6层=48箱
单个电池重约：96g
包材重约：2.9Kg
单箱装配数量：120pcs
单箱毛重约：14.8Kg
一个栈板共5760pcs电池

6. 栈板打包

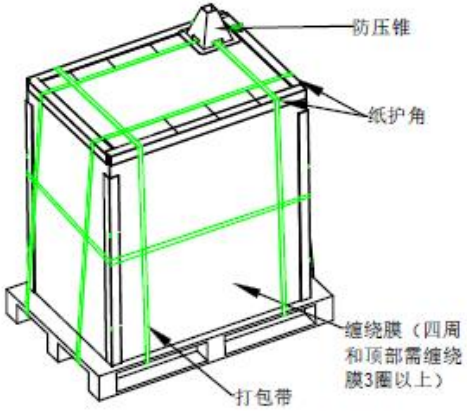

mm<size(A)<=mm	TOL	DRW. No.	DBS003265		福建飞毛腿动力科技有限公司 FUJIAN SCUD POWER TECH. CO.,LTD				
-	-	NAME	包装示意图						
0<A<=30	+/-0.10								
30<A<=50	+/-0.15	DESIGNED			UNIT	mm	MATERIAL		
50<A<=100	+/-0.20	STANDARD			SCALE	NTS			
100<A<=200	+/-0.25	CHECKED			SIZE	A4	PROJECT	Tungsten	
200<A	+/-0.30	APPROVED			SHEET No.	1/1	REV	V	1.0